1962 Falcone

27 January 2014

Legend

1. Headlight assembly
2. Hi/Low beam switch
3. Horn button
4. Ignition indicator
5. Commutator
6. City light — 6V- 5W
7. Headlight bulb — 6V - 35/35W
8. Terminal strip
9. Fuse, lights — 8A
10. Fuse, horn — 8A
11. Horn
12. Battery — 6V- 13.5Ah
13. Tail light — 6V- 3/15W
14. Stop light switch
15. Dynamo — 6V- 60W Marelli DN 36 C
16. Spark plug:
    - Sport — CW 225 LV,
    - Tourismo — CW 200 L
17. Magneto Marelli — MCR4-E
18. Regulator — IRÊ39 C

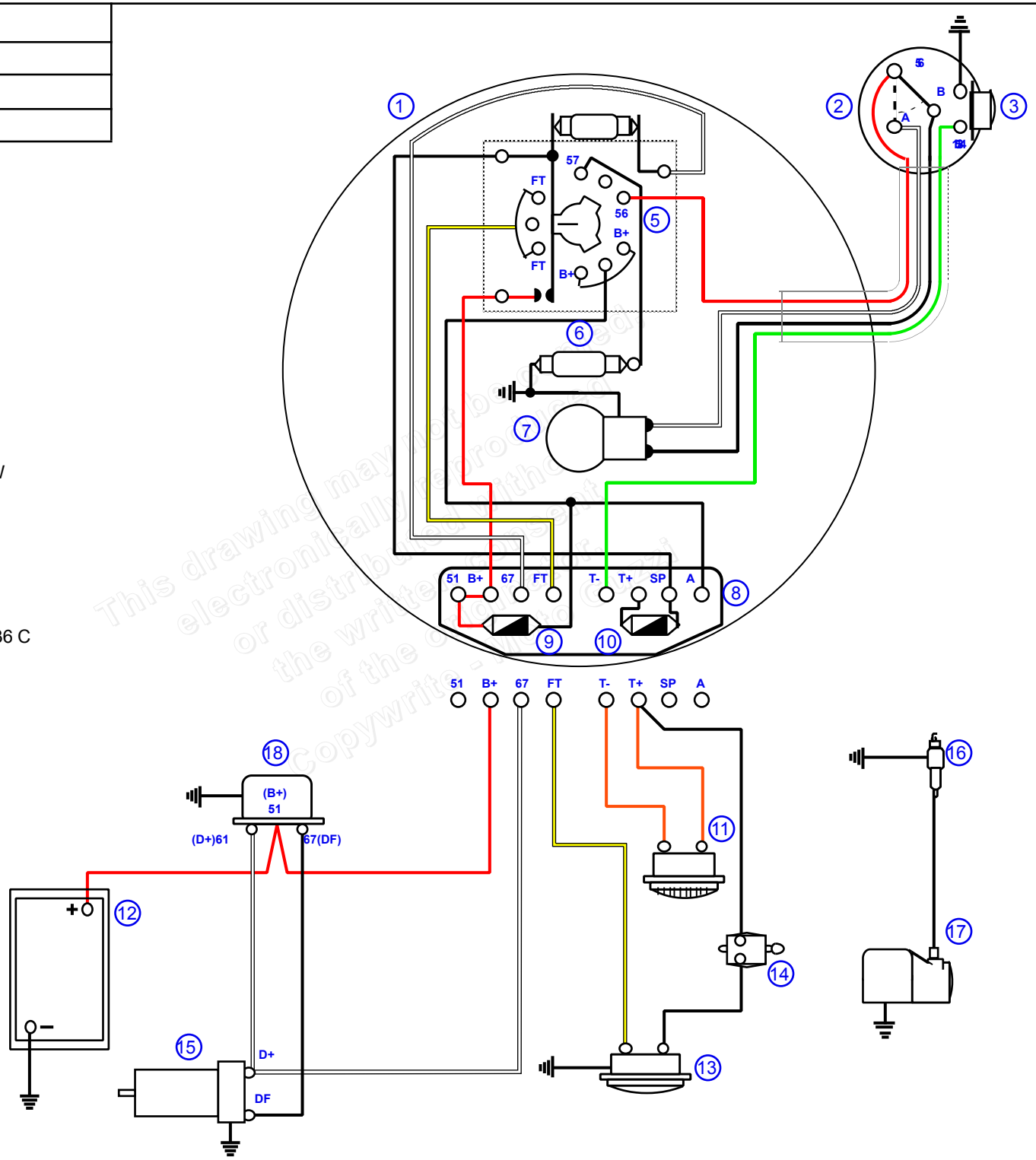

This drawing may not be reproduced electronically or distributed without the written consent of the copyright owner.
Copywrite - Mike Cozzi