1977 V35 Imola V50, Monza,
V75 Lario
8 November 2005
Carl Allison

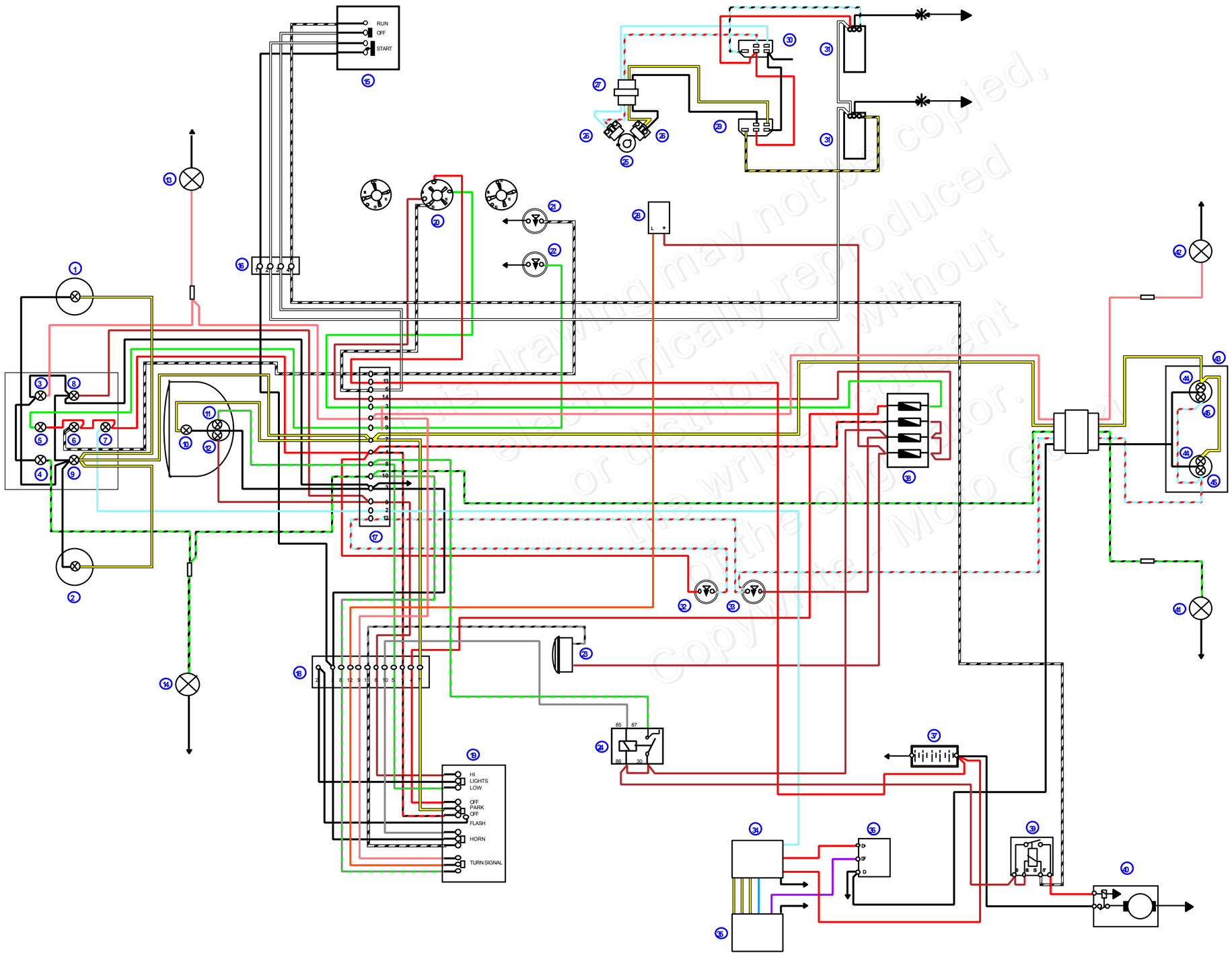

1. Tachometer (3W)
2. Speedometer (3W)
3. R/H front turn signal (21W)
4. L/H front turn signal (21W)
5. Neutral indicator (1.2W)
6. Oil pressure indicator (1.2W)
7. Generator indicator (1.2W)
8. High beam indicator (1.2W)
9. Lights indicator (1.2W)
10. Front parking light (bulb 4W - 12V)
11. High beam (40W)
12. Lowbeam (45W)
13. R/H turn signal indicator (1.2W)
14. L/H turn signal indicator (1.2W)
15. Controls: hi/lo beam, run/stop, starter motor
16. Connector 9-way
17. Connector 15-way
18. Connector 9-way
19. Controls: horn, lights, turn signals
20. Ignition switch
21. Oil pressure switch
22. Neutral position switch
23. Horn
24. Lights relay
25. Ignition rotor
26. Magnetic pick-ups
27. Connector 4-way AMP
28. Flasher
29. Rotor
31. Ignition coils
32. Front brake light switch
33. Rear brake light switch
34. Rectifier
35. Alternator
36. Regulator
37. Battery
38. Fuse block (16A)
39. Starter relay
40. Starter motor
41. L/H rear turn signal (21W)
42. R/H rear turn signal (21W)
43. Tail light assembly
44. Brake light (21W + 21W)
45. Tail light (5W + 5W)
46. Connector 6-way

Fuses

F1: Stop tight (rear brake) ,
Turn Signals.
F2: Starting relay, stop light (front brake),
high beam flash relay,horn.
F3: Warning lights generator, oil, neutral,
High beam warning, low beam.
F4: Parking light - front and rear, instrument
lighting, warning light parking light.

This drawing may not be copied, electronically reproduced or distributed without the written consent of the Moto Guzzi Copyright.