1977 V35III V75

5 November 2005

Carl Allison

Drawing is sized to print as super A3 (13x19") at 50%

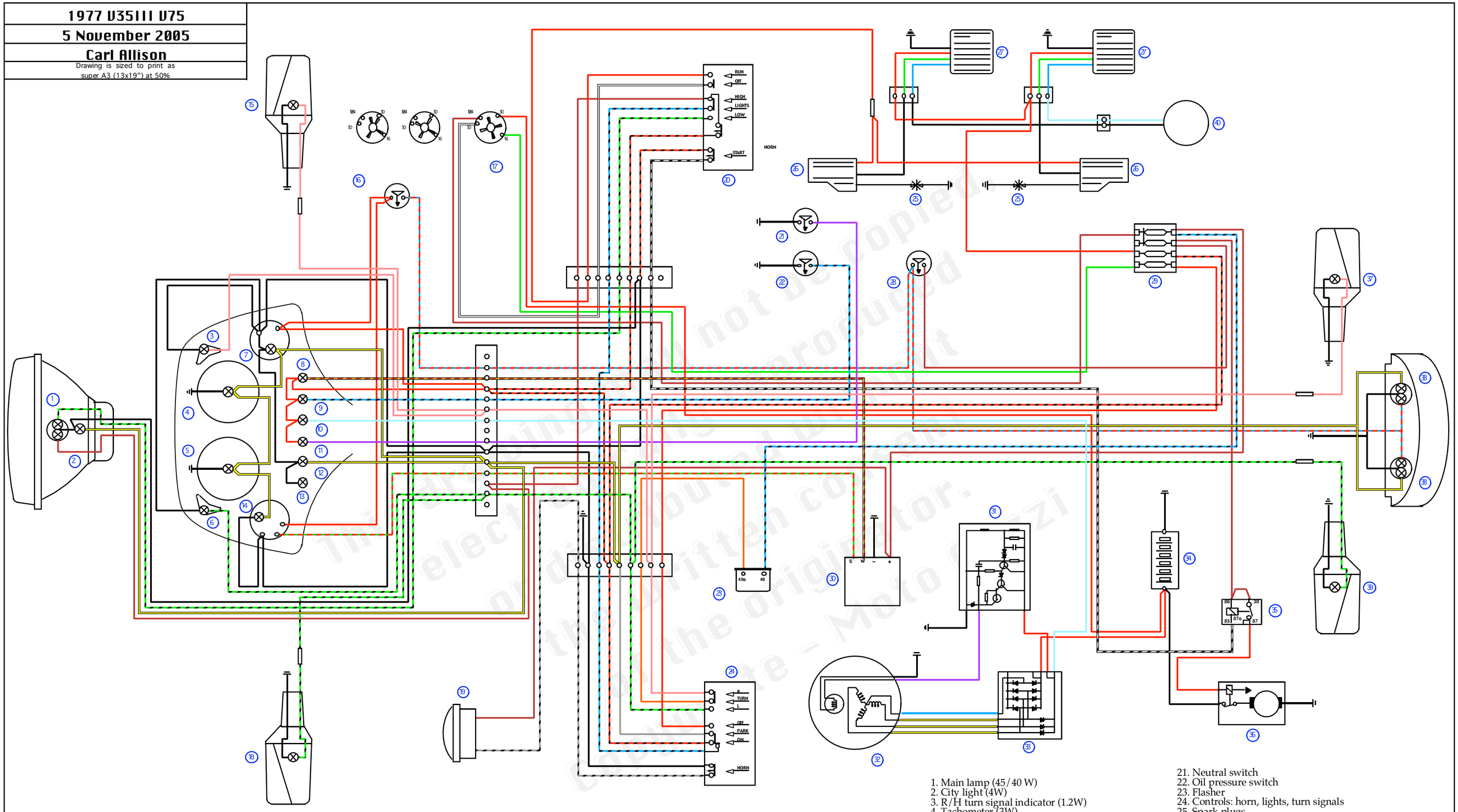

This drawing may not be copied, electronically produced or distributed without the written consent of the originator. Copyright – Moto Guzzi

1. Main lamp (45/40 W)
2. City light (4W)
3. R/H turn signal indicator (1.2W)
4. Tachometer (3W)
5. Speedometer (3W)
6. L/H turn signal indicator (1.2 W)
7. Voltmeter (3W)
9. Oil pressure warning light (1.2 W)
10. Generator warning light (1.2 W)
11. Neutral indicator (1.2 W)
12. Clock (bulb 3W)
13. High beam indicator (1.2 W)
14. Low fuel indicator
15. R/H front turn signal (21 W)
16. Front stop light swtich
17. Ignition switch
18. L/H front turn signal (21 W)
19. Horn
20. Controls: run/stop, starter, high/low beam
21. Neutral switch
22. Oil pressure switch
23. Flasher
24. Controls: horn, lights, turn signals
25. Spark plugs
26. Ignition coil
27. Controls: lights, turn signals, horn
28. Rear stop light switch
29. Fuse block
30. Fuel level transmitter
31. Regulator
32. Alternator (14V 20A)
33. Rectifier
34. Battery
35. Starter relay
36. Starter motor
37. R/H rear turn signal (21 W)
38. Taillight/stop light (21 W)
39. L/H rear turn signal (21 W)
40. Pick-up