2002 Nevada (series 2)

26 October 2005

Carl Allison

Drawing is sized to print as super A3 (13x19") at 50%

F1 Posizioni, Direction Indicators
F2 Emergency flasher, Digiplex Electronic Ignition
F3 Headlight, taillight, instruments
F4 Ignition switch

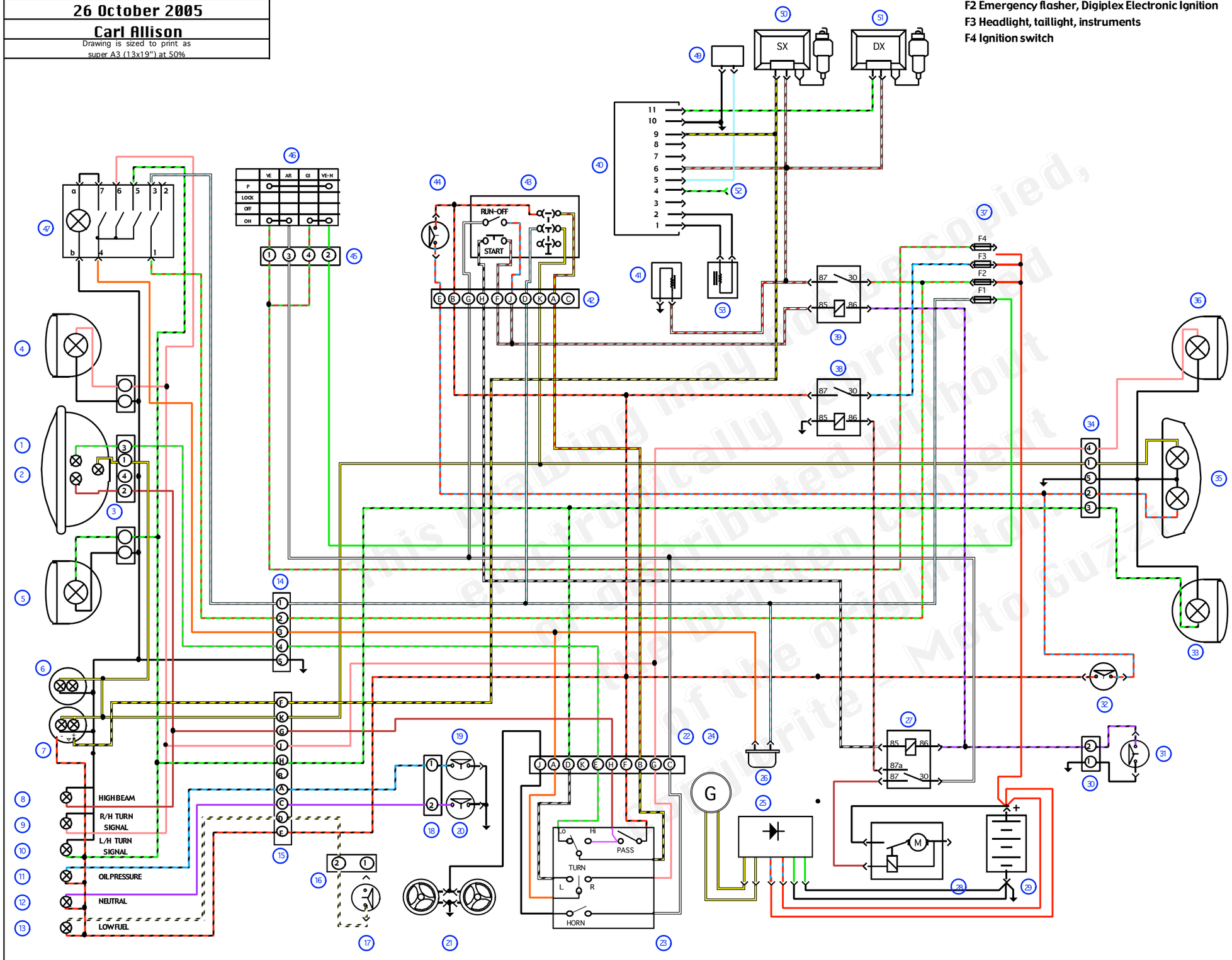

Key to wiring diagram "Shindengen" from frame No. LK 111945

1. Highbeam 55/60W (H4 halogen lamp)
2. Parking light 5W
3. 4-way Amp SS connector (headlamp)
4. RH Front direction indicator
5. LH Front direction indicator
6. Odometer lamp 1.2W+2W
7. Tachometer lamp 1.2W+2W
8. High beam indicator
9. Direction indicator
10. Battery charge signal indicator
11. Oil pressure warning indicator
12. Neutral indicator
13. Fuel level warning lamp
14. 5-way Amp SS connector (dashboard A)
15. 10-way Pakard connector (dashboard B)
16. 2-way Amp SS connector (fuel level switch)
17. Fuel level switch
18. 2-way Molex connector (neutral-oil pressure)
19. Engine oil pressure switch
20. Neutral position switch
21. Dual-tone horns
22. 10-way Packard connector (LH control)
23. LH control device: lights, direction indicators, horns
24. Alternator 13V 350W
25. Voltage regulator (Shindengen)
26. Flasher
27. Starting relay (switch)
28. Starter motor
29. Batteru 12V - 24Ah
30. 2-way Molex connector (side stand safety switch)
31. Side stand safety switch
33. Rear stoplight switch
34. LH rear direction indicator lamp
35. Rear light unit (stop and parking lights)
36. RH rear direction indicator lamp
37. Fuse group
38. Light relay (switch)
39. Digiplex ignition relay (switch)
40. Digiplex electronic ignition diagram
41. Electric fuel valve
42. 10-2ay Packard connector
43. RH control device (ignition-run, start, lights)
45. Front stop switch
46. 4-way Amp SS connector (key switch)
47. Key lock switch
48. Hazard lights switch
49. Diagnostics connector
50. Left side ignition coil and spark plug
51. Right side ignition coil and spark plug
52. Contact for spark advance reduction
53. Phase sensor

Wiring Color Codes

- yellow
- pink
- brown
- orange
- violet
- blue
- light blue
- green
- grey
- white/black
- yellow/white
- red/white
- brown/white
- blue/white
- green/white
- grey/red
- grey/green
- red/yellow
- yellow/black

This drawing may not be copied, electronically redistributed without the written consent of the original author Matteo Guzzi